THE FIRST
SUPER COMPACT TRACTOR
100% ELECTRIC



rino®
ELECTRIC TRACTOR

MADE *in* TUSCANY

Del Morino



Tractor and Implements Fully Electric

Operate 100% with electricity.

No more Emissions in the Atmosphere

Eliminate the cost of fuel.

Noise Relief in Sensitive Areas

Reduce decibels noticeably.

Green Power and Solar Recharging

Utilize 18 kW of real power.

Ecological Spirit



Numerous public and private organizations as well as companies and structures such as hospitals and retirement homes, are looking for efficient solutions for maintenance of parks, gardens, etc. in areas sensible to noise and pollution.

RINO® is the answer. **RINO**® eliminates atmospheric pollution and drastically reduces noise pollution. This revolutionary machine, which has been undergoing testing for many years, is now in production and is being launched internationally.

The End of Emissions into the Atmosphere



RINO® is the first electric multifunctional solution in the world: a combination of single elements that create a system which offers never before seen performance. From today, it can operate in any of its multiple configurations without harmful emissions. Our engineers are continually looking for ways to improve energy efficiency in order to assure that the machine will be able to operate most of the day in all its configurations. With **RINO**® nothing is impossible.

Energy and Functionality



In 2010 our ongoing research to find the perfect equilibrium between performance and autonomy led us to the idea of a universal platform to host a hybrid supply system. With the realization of the first prototype in 2012 we revolutionized the traditional way of thought and went fully electric and launched **RINO**®, the first vehicle in the world that is multifunctional and completely electric. A complex platform and ideal for the AMIS system, which automatically recognizes the connected implements.

A style,
a function,
an icon.



Research and Design



The design details of the **RINO**® are the fruit of the idea that has always guided us in the realization of our products: to offer ease of use and simplicity of operation to the user.

The comfortable driving position is ideal for controlling the work being done in any of it phases. Every part of the machine can be accessed and inspected quickly, all parts can be replaced.



Implements can be raised up to 35 cm from the ground.



Easy height adjustment.

RINO® is an electric tractor, which fits between a standard compact tractor and a lawn mower tractor. It is 100% electric and has a Lithium-ion battery pack with 48V.

The tractor has two electric motors: one dedicated to the movement and the other to the work the machine is doing. With **RINO**® the drawbacks of the hydraulic transmission (loss of power due to wear and to the heating of the components) can be forgotten and there is no cost for fuel.



Easy access to the electrical sockets for charging and for the 230 V, 50 Hz supply, which are located under the load bed.



Quick change of the electrical implements.

RINO® significantly reduces the noise level for working in sensible areas or urban areas and, being electric, does not produce exhaust gas emissions as do machines powered by petrol or diesel fuel. This has a great influence on the quality of the environment where the people working and for the operator of the vehicle.

This will be appreciated by people in city centres, residential areas, golf courses, sport fields, camping sites, amusement parks, as well as areas near hospitals, retirement homes, hotels or resorts where people want to relax or in enclosed areas such as greenhouses.

Dynamic Driving



RINO® offers the most singular driving experience of any tractor of its kind. It has an unbeatable acoustic level, a comfortable driving position with full 360° visibility, front wheel drive and two rear wheels for steering with an optimal turning radius for easy manoeuvrability in tight areas. The front mounted implements provide a perfect and complete view of the working area allowing quick and safe intervention by the operator.

Ease of Operation



The control and information centre of the **RINO**® is designed for functionality with only essential elements. The principal data is shown on a display with the possibility to select the data required. The direction of travel and maximum speed are regulated by a rotary dial.

A *joystick* controls the raising and lowering of the implement, which can “float” at the push of a button to follow uneven terrain. A simple push button starts the implement and the lifting circuit when working and disactivates it when traveling.

Accessories











Outlet 1000W on board

RINO® provides a “real” 18 kW (24cv) to two equal size electric motors, one to power the tractor and one to power the implements. It can be used with many power-hungry implements such as chippers, snow turbines, helicoidal lawn mowers.

In fact, it is perfectly at ease when facing tall grass with a flail mower, lawns with a mulching mower or fine English gardens with helicoidal blades.

Its triangular quick hitch makes it compatible with a large range of implements on the market. The autonomy depends on the type of implement. **RINO**® is recharged using the domestic electrical network and requires 8h 30m (1200 W) or 4h (2400 W) for a full charge.



A “car port” with photoelectric panels is available as an option and makes the recharging process completely “free of cost.”





Forest

- Chippers to chip limbs up to 7 cm diameter
- Leaf vacuums to collect leaves in a container located in the rear of the tractor
- Transport

Green Areas

- **Mowers**
- Grass collection
- **Flail mowers**
- Mulchers

Cultivation

- Ploughs
- Rotary tillers
- Stone buriers
- Cultivator
- Power harrows with and without seeders

Transport and Maintenance

- **Weed brushes**
- **Brushes**
- **Integrated transpot boxes**
- Wagons
- Excavators
- Front buckets
- Snow blades
- Snow turbines

ALREADY AVAILABLE

UNDER STUDY

Technical Data

Frame	Domex steel, bent and welded by robot.		
Power Supply	Lithium-ion battery – 48 V.		
Power	Total available: 18 kWh.		
Autonomy	**Traveling** up to 11h | **Working with brush mowers, finishing mowers, etc.** up to 6h.		
Recharging	**Domestic networks** 1200 W: 8h 30min | **Industrial networks** 2400 W: 4h.		
	Car Port" developed by DEL MORINO with photoelectric panels and battery.		
Power Train	2 driven wheels with variable velocity.		
Max. Speed (forward / reverse)	**While traveling:** 16km/h | **While working:** 5Km/h (variable).		
Dimensions	**Max. Width** (front)	mm	1169
	Max. Width (rear)	mm	1100
	Length (without implements)	mm	2200
	Height from ground	mm	290
	Steering radius	mm	1500
Weight	640 Kg (without implements)		
Tire sizes	**Maximum** Front: 23.10.50 x 12" (265 mm) | Rear: 18.9.50 x 8" (235 mm)		
	Minimum Front: 6.50/80 x 12" (165 mm) | Rear: 16.6.50 x 8" (165 mm)		
Driving	Speed controlled electronically with revers. Hydraulic power steering.		
Lifter	Front controlled by joystick with floating position. Maximum lift capacity 300 kg.		
Implements (power controlled electronically).	Electric brush mowers / mulchers, electric finishing mowers, electric sprayers, electric fork lift. Inverter providing 230 V, 50 Hz for powering tools such as grass or hedge trimmers, chain saws, clippers, etc. or for charging batteries of tools, cell phones, etc.		

18 kW/h

Total power available (limited by BMS protection system to guarantee an operating life of 1000 hours for the battery).

16 km/h

Maximum travel speed of **RINO**® on public roads.

15%

Maximum incline **RINO**® can drive up on dry ground.

Dimensions

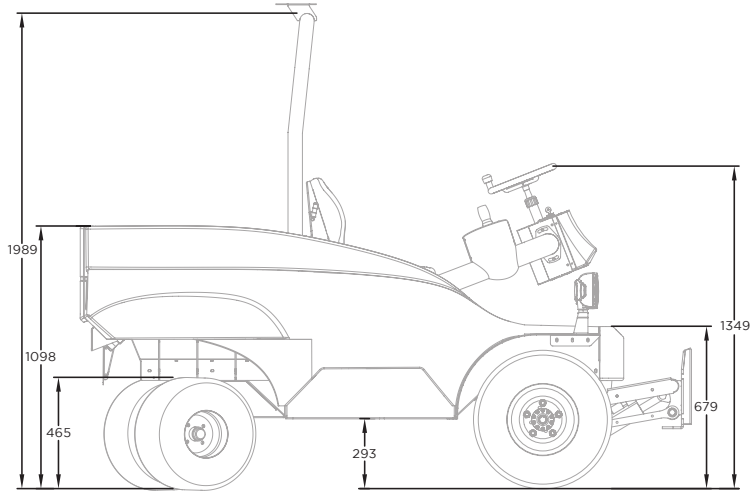
1989
1098
465
293
679
1349

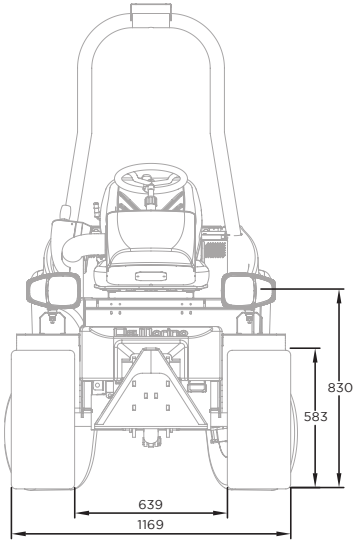
830
583
639
1169

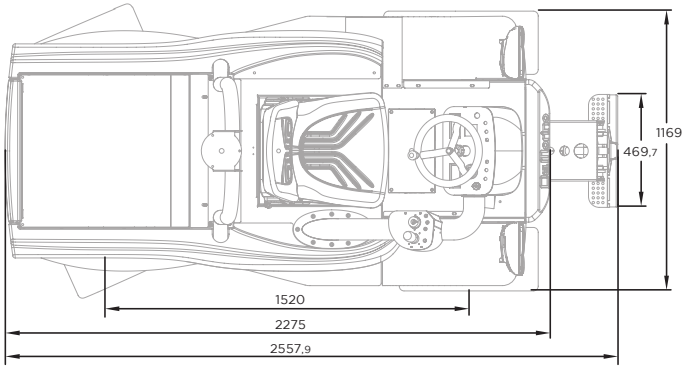
1169
469,7
1520
2275
2557,9

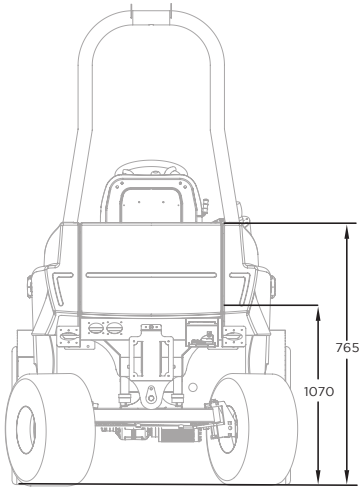
765
1070



rino®

Patented internationally
DEL MORINO s.r.l Via Caroni di Sotto, 19
Caprese Michelangelo - 52033 - Arezzo

rinoelectric.com

DelMorino

All images and data are provided for illustrative and descriptive purposes only and do not constitute a contractual element. The builder reserves his right to modify the characteristics without warning. Subject to typographic errors. Do not throw away.